Model D11832
Combiners In-Phase Connectorized

PRODUCT DATA SHEET **D11832**

Werlatone® ***Mismatch Tolerant®*** High Power Broadband RF Combiners and Dividers will operate into High Load VSWR Conditions, for extended periods, without damage. With extensive experience as a supplier to military platforms worldwide **Werlatone®** designs its High Power Broadband Combiners, Power Dividers, and N-Way Combiners for proper operation in the most stringent operating conditions.

Features:

High Power | Wide Bandwidths | Small Size | High Isolation | Custom Designs Available

Electrical Specifications:

Frequency:	700 - 6000 MHz
Power:	500 W CW
Insertion Loss:	0.6 dB Max.
VSWR:	1.40:1 Max.
Phase Balance:	± 5° Max.
Amplitude Balance:	± 0.2 dB Max.
Isolation:	Non-Isolated

Mechanical Specifications:

Type:	Connectorized
Material:	Aluminum 6061-T6
Surface Finish:	Electroless Nickel – ASTM B733 Type IV
Operating Temperature:	-55°C to +75°C
Storage Temperature:	-60°C to +85°C
Weight:	1.0 lb. 2 oz.
Size:	5.5 x 2.4 x 1.06"

Connector Configurations:

Model	**Sum Port (J1)**	**Input/Output (J2)**	**Input/Output (J3)**
D11832-20	7/16 N Female	N Female	N Female

When specified, Werlatone® High Power Combiners and RF Dividers will tolerate full input failures on adjacent port(s). This insures that remaining transmitter(s) may continue to operate until the amplifier system can be properly shut down for maintenance. Choose your specific connector configuration from a list of options. Additional connector configurations for our High Power RF Combiners/Dividers, Non-Coherent Combiners, and N-Way Combiners are available upon request.

Restriction on use, duplication, or disclosure of proprietary information. This document contains proprietary information which is the sole property of Werlatone, Inc.
Werlatone, Inc. 17 Jon Barrett Road Patterson, NY 12563 T:(845)278-2220 F:(845)278-3440 sales@werlatone.com www.werlatone.com

Performance Data (Specifications subject to change without notice):

Insertion Loss:

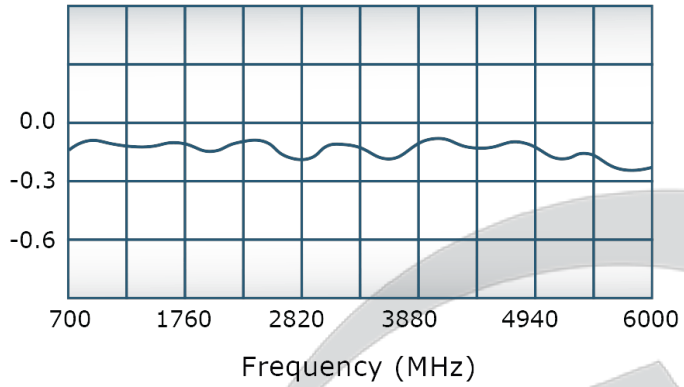

VSWR:

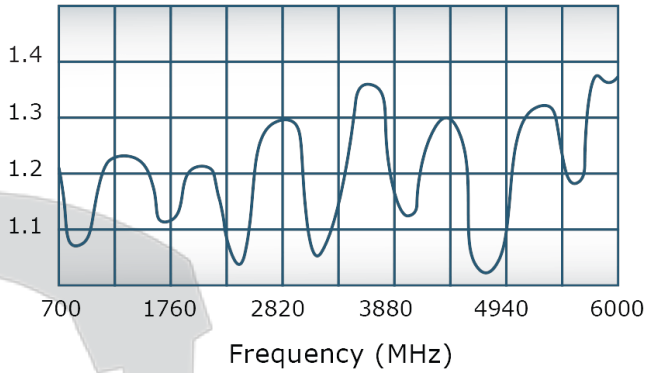

Phase Balance:

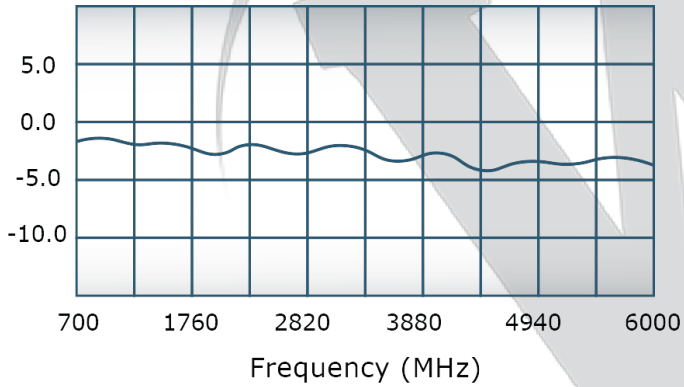

Werlatone.com

Restriction on use, duplication, or disclosure of proprietary information. This document contains proprietary information which is the sole property of Werlatone, Inc.
Werlatone, Inc. 17 Jon Barrett Road Patterson, NY 12563 T:(845)278-2220 F:(845)278-3440 sales@werlatone.com www.werlatone.com

RESTRICTION ON USE, DUPLICATION OR
DISCLOSURE OF PROPRIETARY INFORMATION
This document contains proprietary information
which is the sole property of Werlatone, Inc.

REVISION HISTORY

REV.	REVISION RECORD	DATE	APPROVED
-	INITIAL RELEASE	5/8/2019	CS

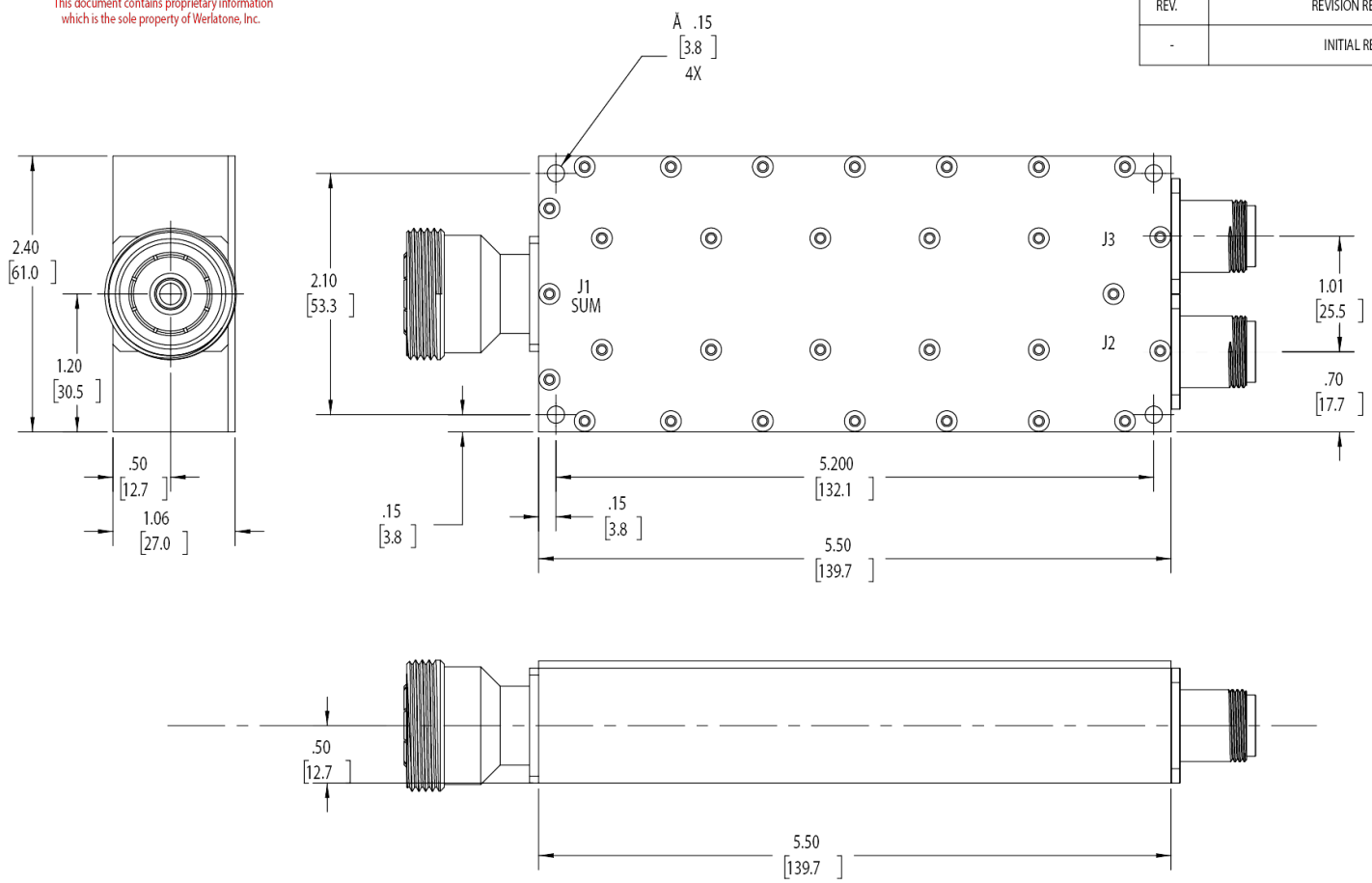

N OTES: UNLESS OTHERWISE SPECIFIED

1. MATERIAL : ALUMINUM 6061-T6
2. SURFACE FINISH: ELECTROLESS NICKEL- ASTM B733 TYPE IV
3. CONNECTORS:
   J1: 7-16 (FEMALE)
   J2, J3: N (FEMALE)

NEXT ASSY	USED ON
	D11832
APPLICATION	

UNLESS OTHERWISE SPECIFIED
INTERPRET DRAWING PER MIL-STD-100
DIMENSIONING PER ASME Y14.5M-2009
PARENTHETICAL INFO FOR REF ONLY
DIMENSIONS ARE IN INCHES [mm]
DIMENSIONAL LIMITS APPLY BEFORE PROCESSES
TOLERANCES:
ANGLES ± 2.5°
±PLACE [ ]
±PLACE [ ]
REMOVE ALL BURRS AND SHARP EDGES R.01 MAX
CONCENTRICITY MACHINED DIA: .002 FIM
MACHINE TOOL MISMATCH: .005 MAX

THIRD ANGLE PROJECTION

		DATE
DWN	PLP	5/8/2019
CHK	CS	5/8/2019
ENGR		
MFGR		
QA		
RLSE		

WERLATONE | SINCE 1965
17 Jon Barrett Rd
Patterson, NY 12563

TITLE
OUTLINE

SIZE	CAGE CODE	DWG NO	REV
B	28812	21701-501	P0

SCALE 1:1 SHEET 1 OF 1

Restriction on use, duplication, or disclosure of proprietary information. This document contains proprietary information which is the sole property of Werlatone, Inc.
Werlatone, Inc. 17 Jon Barrett Road Patterson, NY 12563 T:(845)278-2220 F:(845)278-3440 sales@werlatone.com www.werlatone.com